REVISIONS				
ZONE	REV	DESCRIPTION	DATE	APRVD BY
	A	Added 206B to appl. block / dimensions	26 Sep 72	CED
	B	Converted to Electronic File	03 Jun 10	CED

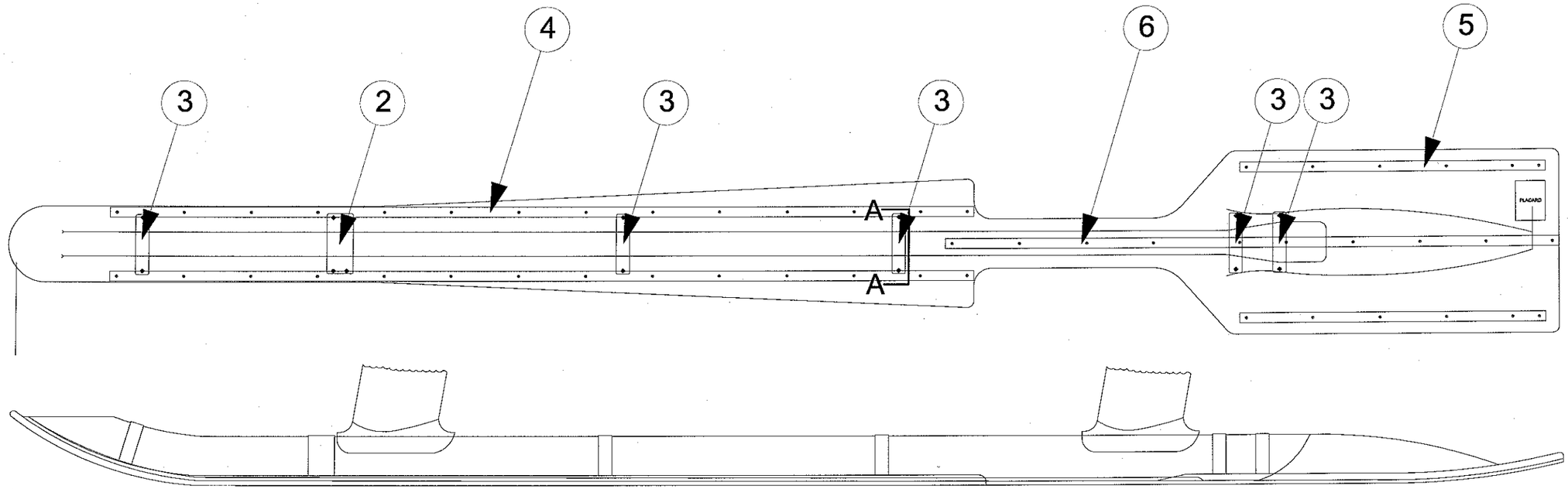

LEFT SKI INSTALLED ON SKID

GENERAL NOTES:

1. THE REAR SKID TUBE PLUG MUST BE CUT OFF FLUSH WITH END OF SKI TUBE. FABRICATE A 2024 T3/T4 PLUG (MIN. THICKNESS .25) AS REQD TO FILL HOLE EXISTING IN SKID TUBE PLUG. BOND IN PLACE WITH PRO SEAL. CHAMFER EDGES TO REMOVE BURRS. FINISH BARE AREAS WITH APPROPRIATE PRIMER COATING.
2. REMOVE SHOES FROM SKID TUBES & REINSTALL SCREWS IN TUBE.
3. SKIS ARE INTERCHANGEABLE FROM RIGHT TO LEFT
4. WHEN BELL HIGH SKID LANDING GEAR KIT P/N 206-706-031-1 IN STALLED AND THIS KIT IS TO BE INSTALLED, SKID TUBES P/N 206-050-107-29 LH & 206-050-107-30 RH MUST BE SHORTENED BU CUTTING 5.5 INCHES FROM AFT END OF BOTH SKIDS. PLUG HOLE IN ENDS OF SKID PER NOTE 1.

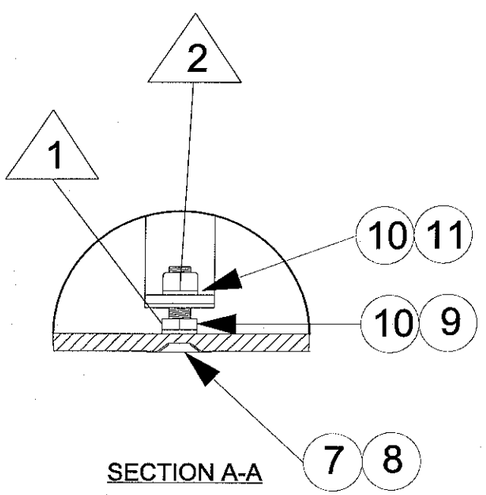

SECTION A-A

1 — ON TWO AFT SCREWS USE AN365-524 NUTS INSTEAD OF AN316-524 NUTS.

2 — TORQUE TO 36 INCH POUNDS +/- 5 INCH POUNDS

THIS DRAWING INCLUDES INFORMATION PROPRIETARY TO AIRGLAS, INC. AND IS SUBMITTED FOR EVALUATION ONLY AND SHALL NOT BE USED TO MANUFACTURE OR REPRODUCE WITHOUT PERMISSION OF AIRGLAS, INC.

NO.	QTY	CODE IDENT. NO.	PART NUMBER	DESCRIPTION	STOCK SIZE	MATERIAL	MATERIAL SPEC.	UTS 1000	FINISH	CALC. UNIT	ACT. WT	ZONE
12	100		SSB-6-8	RIVET								
11	32		AN365-524	NUT								
10	56		AN960-516	WASHER								
9	24		AN316-524	NUT								
8	28		NAS514P524-24	SCREW								
7	28		30185	WASHER								
6	2	17564	L2700-206A-6	MID RUNNER	10 Hole	HR A606 Type 4						
5	4	17564	L2700-206A-5	AFT RUNNER	6 Hole, 2" Close Hole Dia.	HR A606 Type 4						
4	4	17564	L2700-206A-4	FWD RUNNER	14 Hole	HR A606 Type 4						
3	10	17564	L2700-206A-3	STRAP ASSY		304 Stainless						
2	2	17564	L2700-206A-2	STRAP ASSY		304 Stainless						
1	2		L2700-206A-1	LEFT OR RIGHT SKI								
X	1		L2700-206A	SKI KIT	AIRGLAS PROCESS SPEC. 1001-2700							

LIST OF MATERIALS

		UNLESS OTHERWISE SPECIFIED DIMENSIONS ARE IN INCHES	CONTRACT NO.
		DECIMALS .X ± .1 .XX ± .03 .XXX ± .010 ANGLES X° ± 2°	SPEC. CONTROL NO.
	206B	HEAT TREAT MATERIAL GOV. SPEC. STEEL MIL - H - 6875 ALUM. MIL - H - 6088 MAG. CAST MIL - H - 6857	Approved by : WKL
BELL 206A	154 & ON		Checked by :
NEXT ASSY.	USED ON		Drawn by : T. LAMMON
APPLICATION			Date : 25 JUL 1972

Airglas, Inc.
Anchorage, Alaska

SKI INSTALLATION FOR BELL 206

Size	Code Ident.No.		REV
B	17564	L2700-206A	B

Scale: NOT TO SCALE

Sheet 1 OF 1