REVISIONS				
ZONE	LTR	DESCRIPTION	DATE	APPROVED
	A	TAILWHEEL AND ATTACH HARDWARE ADDED. DETAIL D ADDED. SKI KIT P/N CORRECTED.	09 JAN 12	CED

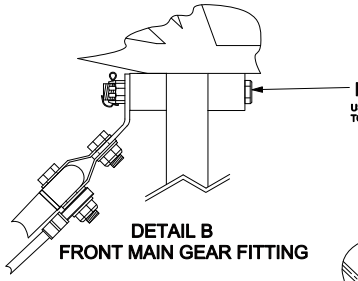

DETAIL B
FRONT MAIN GEAR FITTING

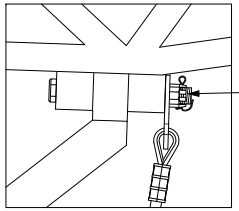

DETAIL C

NOTES

1. INSTALL PER AIRGLAS INSTALLATION INSTRUCTIONS (MANUAL LW2500-105)
2. LEFT SKI IS SHOWN , RIGHT SKI IS OPPOSITE
3. QTY'S SHOWN ARE FOR BOTH SKIS
4. ITEMS 5, 6 & 7 ARE MANUFACTURED AND WELDED AT AIRGLAS FACTORY ONLY

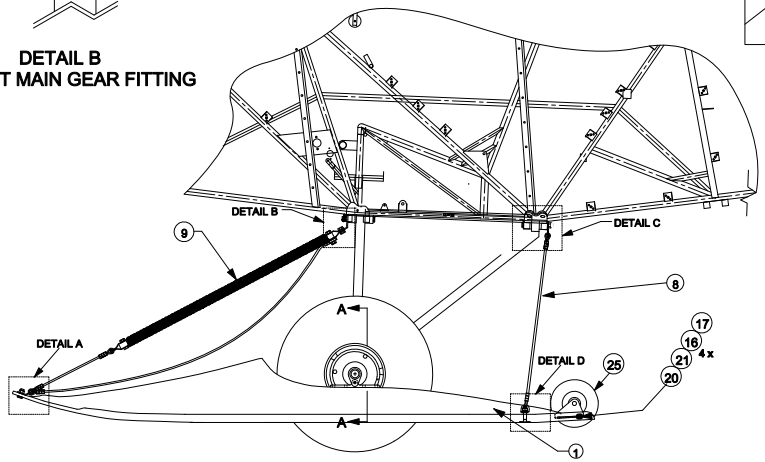

AIRCRAFT IS IN FLIGHT ATTITUDE

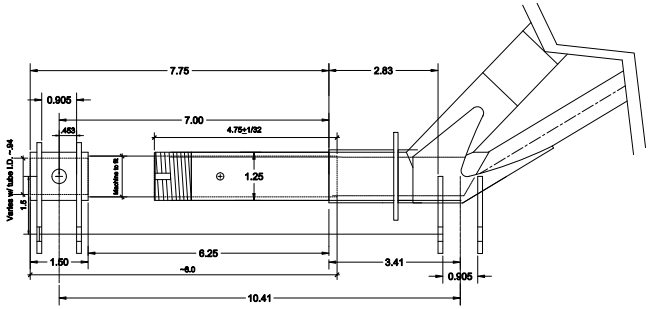

NO.	QTY	CODE IDENT. NO.	PART NUMBER	DESCRIPTION	STOCK SIZE	MATERIAL	MATERIAL SPEC.	UTS 1000	FINISH	CALC. UNIT	ACT. WT	ZONE
25	2	17564	GLH3000-18	TAIL WHEEL ASSY.								
24	4		AN363-616C	NUT								
23	2	17564	PA32-206L-5	SPACER								
22	2		EB616-21	ELEVATOR BOLT								
21	4		2931	SS FENDER WASHER								
20	12		AN4-7A	BOLT								
19	6		AN380-3-2	COTTER PIN								
18	2		MS171596	ROLL PIN								
17	18		AN365-428	NUT								
16	18		AN960-416	WASHER								
15	8		AN960-616	WASHER								
14	6		AN310-6	NUT								
12	2		AN4-14A	BOLT								
11	4		AN6-16	BOLT								
10	2		AN6-21	BOLT								
9	2	17564	LW2500-A1-9	RIGGING, BUNGEE & SAFETY CABLE ASSY.								
8	2	17564	LW2500-A1-8	RIGGING, CHECK CABLE ASSY.								
7	2	17564	LW2500-PA-18-7	OUTBD ATTCH BRACKET.								
6	2	17564	LW2500-PA-18-6	STUB AXLE								
5	1	17564	LW2500-PA18-4-3A	EAR								
4			RESERVED									
3	4	17564	LW2500-3	SKI ATTACH FITTING								
2	1	17564	LW2500-2	RIGHT SKI								
1	1	17564	LW2500-1	LEFT SKI								
	1	17564	LW2500-A1	SKI KIT	C.G. IS 1.5" FORWARD OF C.L. OF MAIN GEAR AXLE, INSTALLED KIT WT IS 90 lbs.							

LIST OF MATERIALS

USE #13 DRILL FOR 3/16 ROLL PIN

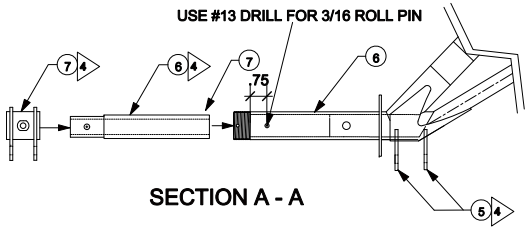

SECTION A - A

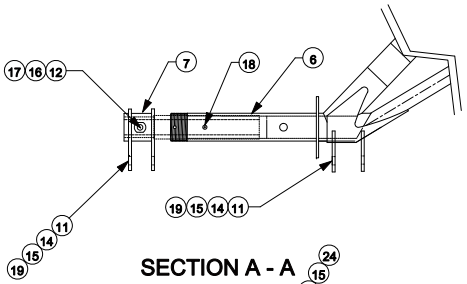

SECTION A - A

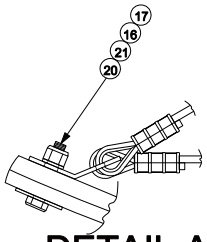

DETAIL A

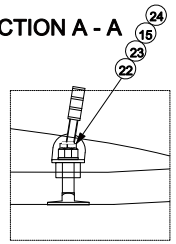

DETAIL D

	AVIAT A-1C-200	UNLESS OTHERWISE SPECIFIED DIMENSIONS ARE IN INCHES	CONTRACT NO.
	AVIAT A-1C-180	DECIMALS X ± .1 XX ± .05 XXX ± .010 ANGLES X° ± 2°	SPEC. CONTROL NO.
	AVIAT A-1B		
	AVIAT A-1A	HEAT TREAT MATERIAL GOV. SPEC.	Approved by : CED
	AVIAT A-1	STEEL MIL - H - 6875	Checked by : CED
NEXT ASSY.	USED ON	ALUM. MIL - H - 6088 MAG. CAST MIL - H - 6857	Drawn by : JDH
APPLICATION			Date : 01 SEPT 11

Airglas, Inc.
Anchorage, Alaska

LW2500 SKI INSTALLATION
AVIAT HUSKY

Size	Code Ident.No.		REV
B	17564	LW2500-1-A1	A

Scale: DO NOT SCALE Sheet 1 OF 1