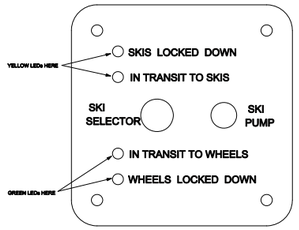

SKI SELECTOR PANEL

DO NOT EXCEED 138 MPH IAS WITH AIRGLAS GLH3000 SKIS INSTALLED

LOCATE ADJACENT TO AIRSPEED INDICATOR (170, 170A, 170B MODELS)

ONLY NORMAL CATEGORY OPPERATIONS APPROVED, SPINS ARE PROHIBITED.

LOCATE IN FULL VIEW OF THE PILOT (170, 170A, 170B MODELS)

CAUTION- IT IS POSSIBLE TO EXCEED THE FORWARD CG LIMITAION WITH AIRGLAS SKIS INSTALLED AND MINIMUM FUEL. OPERATIONS OUTSIDE THE CG LIMITATIONS ARE PROHIBITED.

LOCATE IN FULL VIEW OF THE PILOT (ALL MODELS)

CAUTION- IT IS POSSIBLE TO EXCEED THE AFT CG LIMITAION WITH AIRGLAS SKIS INSTALLED. OPERATIONS OUTSIDE THE CG LIMITATIONS ARE PROHIBITED.

LOCATE IN FULL VIEW OF THE PILOT (170 ONLY)

CAUTION- IT IS POSSIBLE TO EXCEED THE MAXIMUM WEIGHT LIMITAION WITH AIRGLAS SKIS INSTALLED AND ALL SEATS OCCUPIED. OPERATIONS OUTSIDE THE MAXIMUM WEIGHT LIMITATIONS ARE PROHIBITED.

LOCATE IN FULL VIEW OF THE PILOT (ALL MODELS)

AVOID SLIPS WITH FLAPS EXTENDED WHILE ON SKIS.

LOCATE IN FULL VIEW OF THE PILOT (ALL 180 MODELS)

DO NOT EXTEND OR RETRACT SKIS WHILE IN MOTION ON THE GROUND.

LOCATE IN FULL VIEW OF THE PILOT (ALL 180 MODELS)

DO NOT EXCEED 172 MPH IAS WITH AIRGLAS GLH3000 SKIS INSTALLED

LOCATE ADJACENT TO AIRSPEED INDICATOR (ALL 180 MODELS)

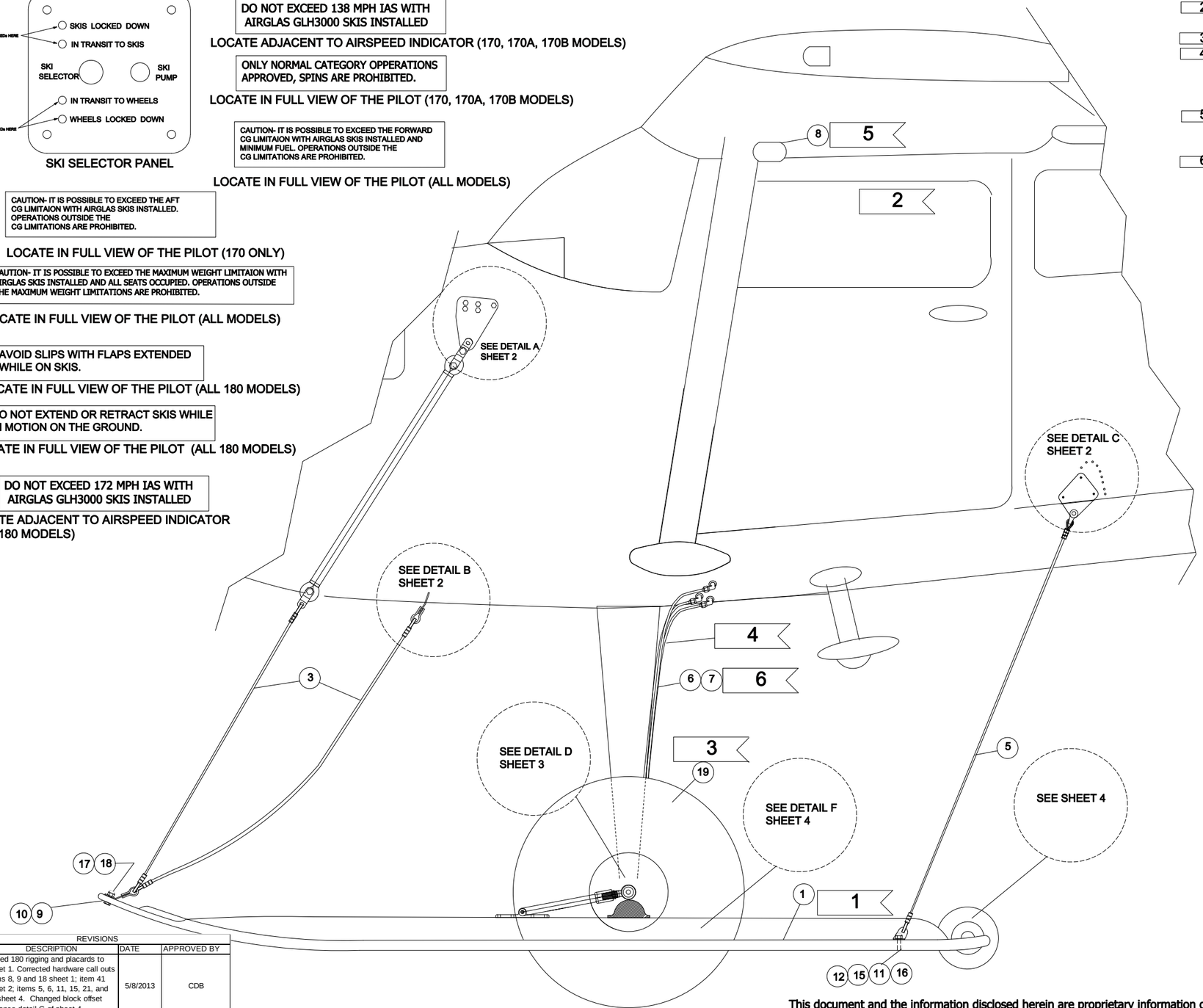

NOTES:

1. CONFIRM SKI DEFLECTIONS AFTER INSTALLATION USING CHART #1.
2. SKI ANGLES MEASURED BETWEEN UPPER DOOR SILL ON AIRCRAFT ("0") AND FLAT SURFACE ON SKI, JUST AFT OF MAIN TIRE CUT-OUT.
3. CONFIRM BRAKE CALIPER CLEARS SKI IN ALL FLIGHT POSITIONS.
4. FABRICATE HOSES IAW AC 43.13-1B CHAPTER 9 PARAGRAPH 9-30 (d).ROUTE HOSES ALONG AFT INBOARD SIDE OF MLG. SECURE TO BRAKE LINE AND EACH OTHER AT MINIMUM 18" INTERVALS USING MIL-T43435B RUBBER LACING (OR EQUIVALENT).
5. INSTALL AEROCET INC. P/N 35A-59402 CONVEX MIRROR IAW 35A-59402 REV. A JUST AFT OF LIFT STRUT ON CO-PILOTS WING. ADJUST UNTIL RIGHT HAND SKI DOOR IS VISIBLE FROM PILOTS SEAT.
6. (OPTIONAL) FABRICATE LINES IAW AC43.13-1B CHAPTER 9 PARAGRAPH 9-30(a) & 9-30(b) DOWN TO AXLE, USING 1/4" 5052-O (AMS-4070M), AN818-4D, AND MS20819-4D.

Item	Quantity	Weight	Arm	Moment
Pump with fittings and bracket		7.50	146.00	1095.00
Hydraulic fluid in pump	0.25	1.82	146.00	264.99
Wire harness and switches		2.25	88.25	198.56
Fwd fuselage hoses		1.50	30.50	45.75
Ski to fuselage hoses		4.00	22.00	88.00
Rear fuselage hoses		4.00	88.25	353.00
Stub axles and flanges		3.25	22.00	71.50
Forward fuselage rigging fittings		0.60	4.00	2.40
Rear fuselage rigging fittings		0.86	72.50	62.06
Safety cable tabs		0.21	(0.25)	(0.05)
GLH3000-SG	PAIR	USE ACTUAL WEIGHT	USE ACTUAL CG	USE ACTUAL MOMENT
Installation Total:		USE ACTUAL WEIGHT	USE ACTUAL CG	USE ACTUAL MOMENT
INSTALLATION WEIGHT:	USE ACTUAL WEIGHT			
INSTALLATION CG:	USE ACTUAL CG			

TYPICAL INSTALLATION WEIGHTS , ARMS, AND MOMENTS

POSITION	ANGLE MAX/MIN	BUNGEE LOAD MAX/MIN	NOTES
FLIGHT ANGLE SKI HANGING BY YOKE SAFETY CABLE AND SAFETY CABLE (TIP DOWN)	8 MINIMUM 15 MAXIMUM	NOT APPLICABLE	
BUNGEE CABLE FLIGHT LOAD (WHEEL POSITION)	NOT APPLICABLE	80 LBS. MINIMUM 100 LBS. MAXIMUM	MEASURE TENSION ON CRUST CUTTER CABLE USING CABLE TENSIOMETER
SKI TIP UP ANGLE (SKI POSITION)	0 MINIMUM 1.5 MAXIMUM	NOT APPLICABLE	
SKI TIP UP ANGLE (WHEEL POSITION)	5 MINIMUM 11 MAXIMUM	NOT APPLICABLE	
SKI TIP DOWN ANGLE (SKI POSITON)	10 MINIMUM 15 MAXIMUM	NOT APPLICABLE	
SKI TIP DOWN ANGLE (WHEELPOSITON)	15 MINIMUM 25 MAXIMUM	NOT APPLICABLE	

CHART 1 - SKI RIGGING CHECK

NO.	QTY	CODE-IDENT-NO	PART NO.	DESCRIPTION	NOTES
21	6		AN5-36A	BOLT	(NOT DEPICTED, FOR CLEVELAND WHEEL ONLY, NOT FURNISHED)
20	2	17564	LW3600-180-8	BRAKE SPACER	(NOT DEPICTED, FOR CLEVELAND WHEEL ONLY, USE IF NEEDED)
19	2		8.50X6 6 PLY	TIRE	NOT FURNISHED, TIRE PRESSURE: 25 PSI MAX, 20 PSI MIN
18	4		AN960-416	WASHER	
17	4		MS21044N4	NUT	
16	2		AN365-524	NUT	
15	2		30185	COUNTER SUNK WASHER	
14	16		AN960-616	WASHER	
13	10		AN363-624	NUT	
12	2		NAS514P524-16	BOLT	
11	2		AN960-516	WASHER	
10	4		2931	SS LARGE AREA WASHER (OR EQUIVILANT BOLTDEPOT.COM)	
9	4		AN4-11A	BOLT	
8	1		35A-59402	CONVEX MIRROR ASSY.	NOT FURNISHED
7	AR		111-4	STRATOFLEX HOSE OR EQUIVELENT	
6	8		300-4S	STRATOFLEX FITTING OR EQUIVELENT	
5A	2	17564	GLH3000-170/180-13	CHECK CABLE ASSY. 170 SERIES W/180 GEAR LEG INSTALLATION	
5B	2	17564	GLH3000-180-13	CHECK CABLE ASSY. 180 SERIES	
3A	2	17564	GLH3000-170/180-14	SAFETY CABLE ASSY. 170 SERIES W/180 GEAR LEG(bungee/safety	
5	2	17564	GLH3000-170-13	CHECK CABLE ASSY. 170 SERIES	
3B	2	17564	GLH3000-180-14	SAFETY CABLE ASSY. 180 SERIES (bungee/safety cable assy.)	
3	2	17564	GLH3000-170-14	SAFETY CABLE ASSY. 170 SERIES (bungee/safety cable assy.)	
2	1	17564	GLH3000-SG-2	RIGHT SKI	(NOT SHOWN)
1	1	17564	GLH3000-SG-1	LEFT SKI	
X		17564	GLH3000-170	SKI KIT	

QUANTITY FOR SKI KIT (2 SKIS)

LIST OF MATERIALS

REVISIONS

REV	DESCRIPTION	DATE	APPROVED BY
A	Added 180 rigging and placards to sheet 1. Corrected hardware call outs items 8, 9 and 18 sheet 1; item 41 sheet 2; items 5, 6, 11, 15, 21, and 22 sheet 4. Changed block offset distance detail G of sheet 4.	5/8/2013	CDB
B	ON SHEET 4: ADDED NOTE 3. ADDED SEALING NOTE ON ITEM 15. CHANGED PART NUMBER FOR ITEM 14, AND 7. ADDED MS AND NAS ALTERNATES FOR OBSOLETE AN NUMBERS.	9/6/2016	CDB
C	Added inboard runners and note 4 on sheet 4. Revised W&B data on sheet 1.	6/6/2017	CDB

THIS DRAWING INCLUDES INFORMATION PROPRIETARY TO AIRGLAS, INC. AND IS SUBMITTED FOR EVALUATION ONLY AND SHALL NOT BE USED TO MANUFACTURE OR REPRODUCE WITHOUT PERMISSION OF AIRGLAS, INC.

This document and the information disclosed herein are proprietary information of Airglas, Inc. Neither this document nor the information contained herein shall be transmitted, reproduced, copied, or disclosed in any form or by any means without the written authorization of Airglas, Inc.

The information disclosed herein includes trade secrets and confidential business and/or financial information and falls within exemption (b) (4) of 5 USC 552 (FOIA) and the prohibitions of 18 USC 1905.

NEXT ASSY. | USED ON

APPLICATION

UNLESS OTHERWISE SPECIFIED DIMENSIONS ARE IN INCHES
DECIMALS X ± .1 XX ± .03 XXX ± .010
ANGLES X° ± 2°

HEAT TREAT
MATERIAL GOV. SPEC.
STEEL MIL - H - 6875
ALUM. MIL - H - 6088
MAG. CAST MIL - H - 6857

CONTRACT NO.
SPEC. CONTROL NO.
Approved by : JDH
Checked by : JDH
Drawn by : CDB
Date : 30 APR 2012

Airglas, Inc.
Anchorage, Alaska

GLH3000 SKI INSTALLATION ON CESSNA 170,180

Size	Code Ident.No.		REV
B	17564	GLH3000-170	C

Scale: Do Not Scale | Sheet 1 OF 4

NOTE: MOUNT BRACKET (38) SO AFT EDGE IS PARALLEL TO STA. 0.00

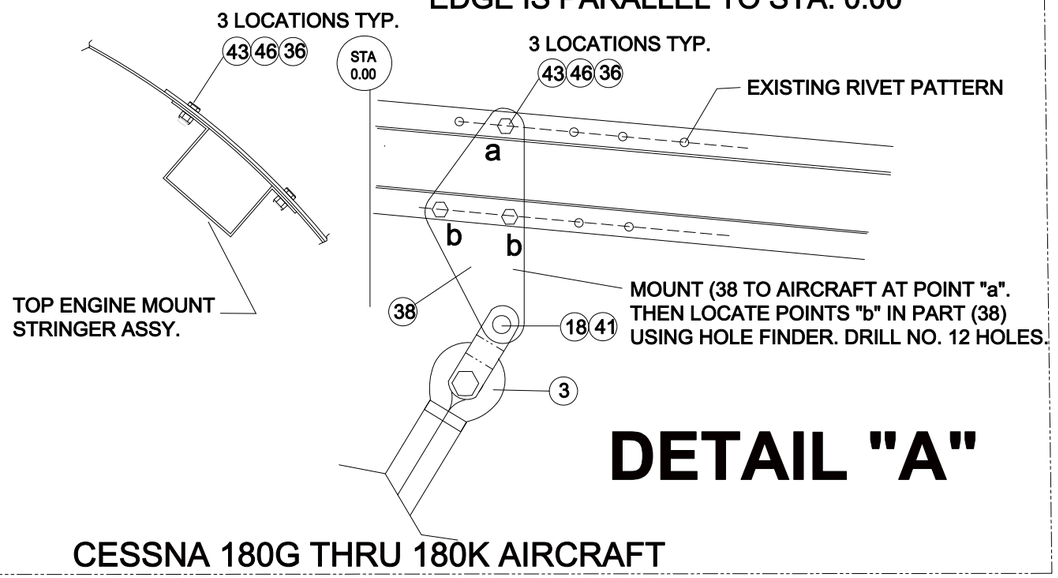

DETAIL "A"

CESSNA 180G THRU 180K AIRCRAFT

NOTE: MOUNT BRACKET (38) SO FORWARD EDGE IS PARALLEL TO STA. 0.00

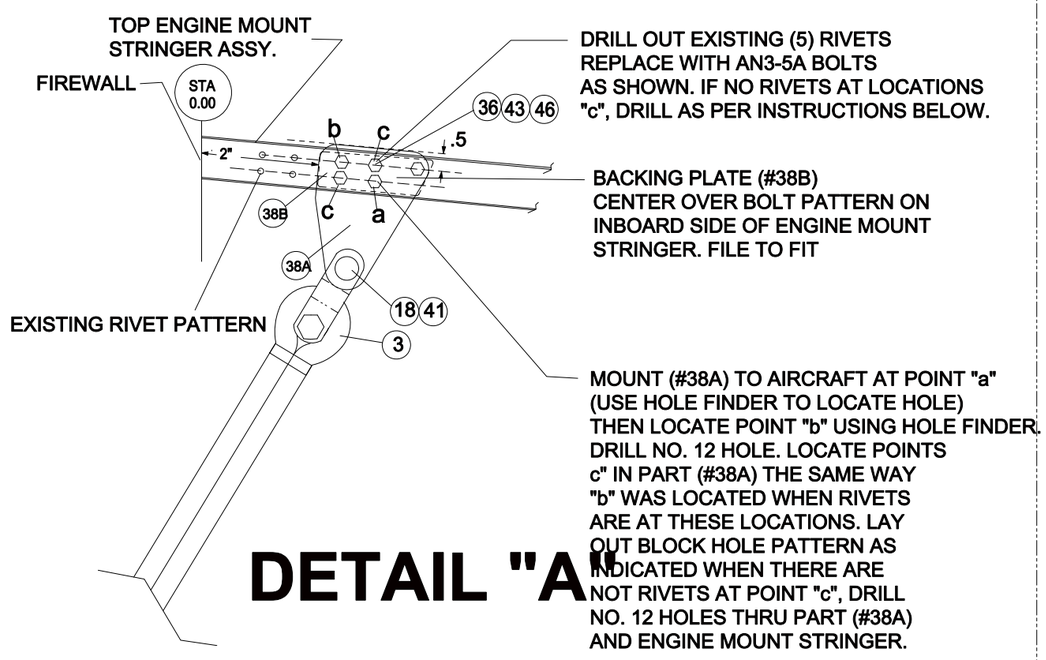

DETAIL "A"

CESSNA 180 THRU 180F AND 170 AIRCRAFT

DETAIL "B"

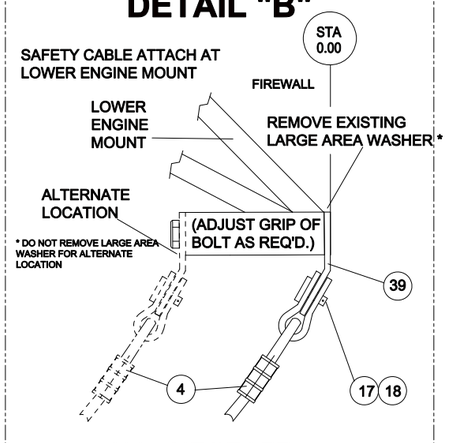

ALL AIRCRAFT

DETAIL "C"

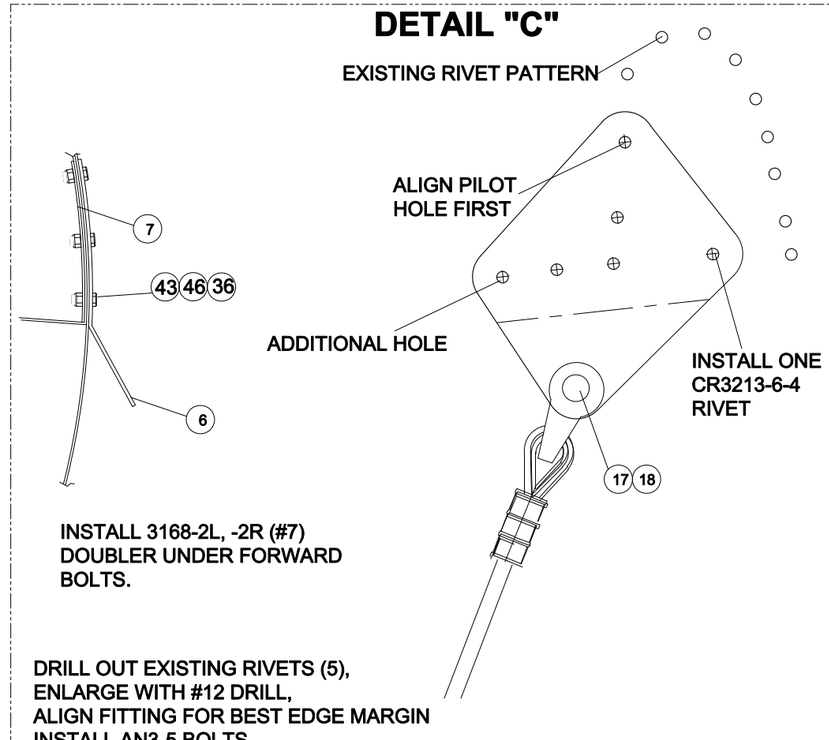

INSTALL 3168-2L, -2R (#7) DOUBLER UNDER FORWARD BOLTS.

DRILL OUT EXISTING RIVETS (5), ENLARGE WITH #12 DRILL, ALIGN FITTING FOR BEST EDGE MARGIN INSTALL AN3-5 BOLTS.

ALL AIRCRAFT

NOTES:

ALL DETAILS: LEFT DEPICTED, RIGHT OPPOSITE.

NO.	QTY	CODE-IDENT-NO	PART NO.	DESCRIPTION	NOTES
46	A/R		AN365-1032	NUT	
43	A/R		AN3-5A	BOLT	
41	2		AN396-15	CLEVIS PIN	
39	2	17564	3168-3	TAB	
38B	2	17564	3168-4D	DOUBLER FORWARD RIGGING BRACKET LH & RH	170 AND 180 THRU 180K
38A	2	17564	3168-4L, 3168-4R	FORWARD RIGGING BRACKET LH & RH	170 AND 180 THRU 180K
38	2	17564	LW3600-180A-9 & -10	FORWARD RIGGING BRACKET LH & RH	180G THRU 180K
37	2		AN365-524	NUT	
36	A/R		AN960-10	WASHER	
18	6		AN380-3-2	COTTER PIN	
17	4		AN395-17	CLEVIS PIN	
7	2	17564	3168-2L & -2R	DOUBLER	
6	2	17564	3168-5L & -5R	REAR CABLE ATTACH	
5A	2	17564	GLH3000-170/180-13	CHECK CABLE ASSY. 180 GEAR LEG	
4A	2	17564	GLH3000-170/180-14	SAFETY CABLE ASSY. 180 GEAR LEG (bungee/safety cable assy.)	
3A	2	17564	GLH3000-170/180-14	BUNGEE ASSY. 180 GEAR LEG	
5	2	17564	GLH3000-170-13	CHECK CABLE ASSY. 170 SERIES	
4	2	17564	GLH3000-170-14	SAFETY CABLE ASSY. 170 SERIES (bungee/safety cable assy.)	
3	2	17564	GLH3000-170-14	BUNGEE ASSY.- 170 SERIES	
QUANTITY FOR SKI KIT (2 SKIS)					

THIS DRAWING INCLUDES INFORMATION PROPRIETARY TO AIRGLAS
AND IS SUBMITTED FOR EVALUATION ONLY AND SHALL NOT BE USE
MANUFACTURE OR REPRODUCE WITHOUT PERMISSION OF AIRGLAS

This document and the information disclosed herein are proprietary information of Airglas, Inc. Neither this document nor the information contained herein shall be transmitted, reproduced, copied, or disclosed in any form or by any means without the written authorization of Airglas, Inc.

The information disclosed herein includes trade secrets and confidential business and/or financial information and falls within exemption (b) (4) of 5 USC 552 (FOIA) and the prohibitions of 18 USC 1905.

UNLESS OTHERWISE SPECIFIED DIMENSIONS ARE IN INCHES
DECIMALS X ± .1 XX ± .03 XXX ± .010
ANGLES X° ± 2°

HEAT TREAT
MATERIAL GOV. SPEC.
STEEL MIL - H - 6875
ALUM. MIL - H - 6088
MAG. CAST MIL - H - 6857

NEXT ASSY. | USED ON
APPLICATION

CONTRACT NO.
SPEC. CONTROL NO.
Approved by : JDH
Checked by : JDH
Drawn by : CDB
Date : 30 APR 2012

Airglas, Inc.
Anchorage, Alaska

GLH3000 SKI INSTALLATION ON CESSNA 170,180

Size	Code Ident.No.		REV
B	17564	GLH3000-170	C

Scale: Do Not Scale
Sheet 2 OF 4

INSTALLATION NOTES

1. ALIGN AXLES IN ACCORDANCE WITH CESSNA SERVICE MANUAL BEFORE SKI INSTALLATION.
2. INSTALL NYLON LOCK SCREW NS-10-32-3 UNTIL VISIBLE IN BORE. NAS1312-15 BOLT WILL BE SAFELY HELD WHEN THREADED OVER LOCK SCREW.
3. AXLE END PLAY IS CONTROLLED BY PLACING THE PROPER NUMBER OF WASHERS BETWEEN THE INBD. FITTING AND FLANGE, AND BETWEEN OUTBD FITTING AND STUB AXLE.
4. MAINTAIN BRAKE CASTING TO SKI CLEARANCE THRU ALL IN FLIGHT ATTITUDES.
5. TIGHTEN NAS1312-15 BOLT TO 70 FT. LBS.
6. GLH3000-10-170 SAFETY CABLE INSTALLED ON THIS GROOVE.
7. TORQUE NAS145 BOLTS TO 120-145 IN. LBS., TORQUE NAS146 BOLTS TO 200-250 IN. LBS.
8. MOVE BRAKE CALIPER TO AFT SIDE OF AXLE.

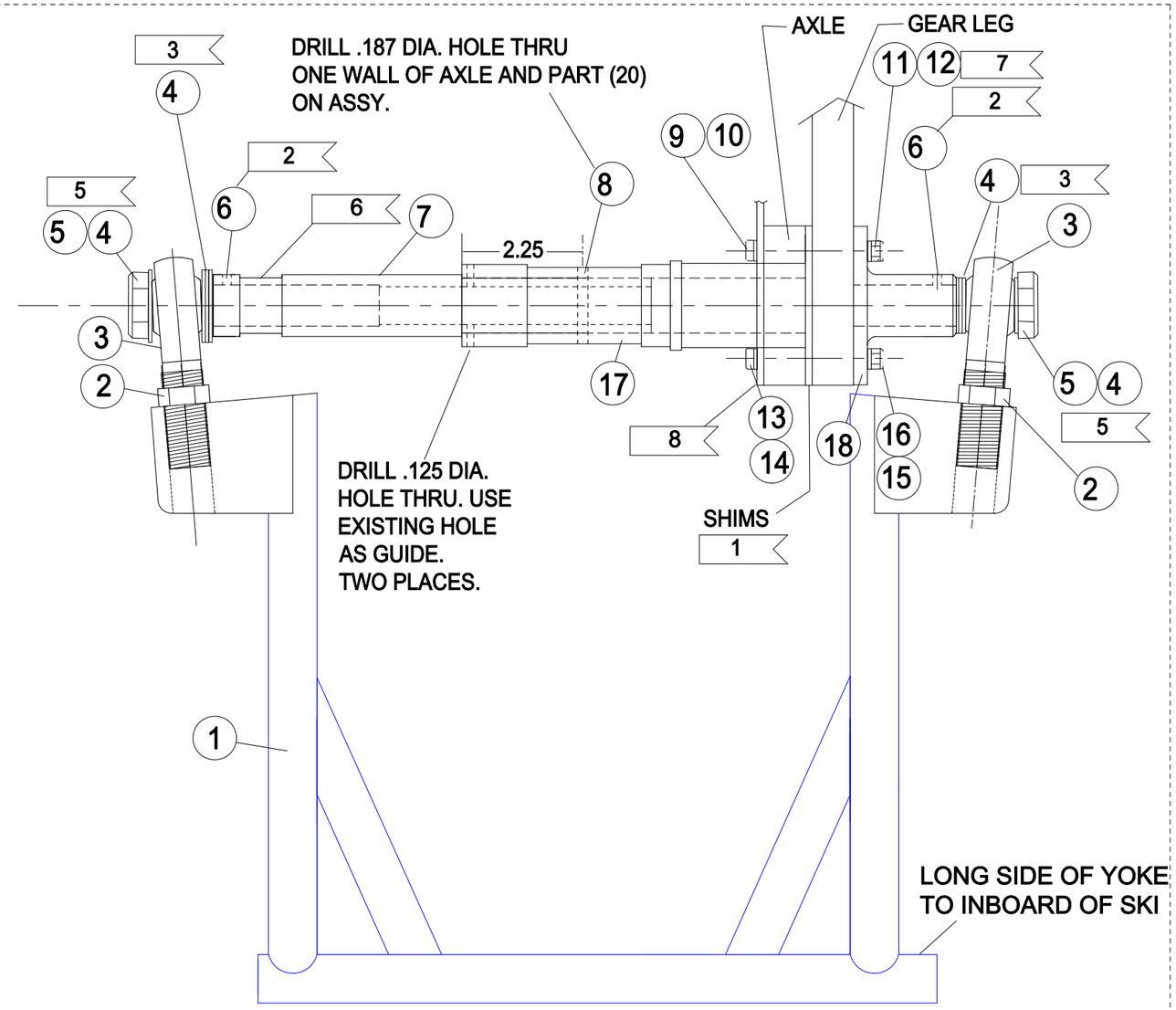

NOTES:

YOKE INSTALLED ON AXLE

LEFT DEPICTED, RIGHT OPPOSITE.
(WHEEL AND TIRE OMITTED FOR CLARITY)

DETAIL "D"

LIST OF MATERIALS

QUANTITY PER AIRCRAFT

NO.	QTY	CODE-IDENT-NO	PART NO.	DESCRIPTION
18	2	17564	LW3600-180-4A	FLANGE
17	2		1441003-1	AXLE (NOT FURNISHED)
16	AR		NAS1149F0663P	WASHER
15	4		MS21045-6	NUT
14	4		MS20002C6	WASHER
13	4		NAS146-42	BOLT
12	AR		NAS1149F0563P	WASHER
11	4		MS21045-5	NUT
10	4		MS20002C5	WASHER
9	4		NAS145-41	BOLT
8	2		MS171597	ROLL PIN
7	2	17564	LH3600-7	STUB AXLE
6	4	17564	NS-10-32-3	NYLON SCREW
5	4		NAS1312-15	BOLT
4	AR		NAS1149F1290P	WASHER
3	4	17564	CM12	ROD END
2	4		AN316-12R	NUT
1	2	17564	GLH3000-5-170	YOKE

This document and the information disclosed herein are proprietary information of Airglas, Inc. Neither this document nor the information contained herein shall be transmitted, reproduced, copied, or disclosed in any form or by any means without the written authorization of Airglas, Inc.

The information disclosed herein includes trade secrets and confidential business and/or financial information and falls within exemption (b) (4) of 5 USC 552 (FOIA) and the prohibitions of 18 USC 1905.

THIS DRAWING INCLUDES INFORMATION PROPRIETARY TO AIRGLAS, INC. AND IS SUBMITTED FOR EVALUATION ONLY AND SHALL NOT BE USED TO MANUFACTURE OR REPRODUCE WITHOUT PERMISSION OF AIRGLAS, INC.

NEXT ASSY. | USED ON | APPLICATION

UNLESS OTHERWISE SPECIFIED DIMENSIONS ARE IN INCHES
DECIMALS .X ± .1 .XX ± .03 .XXX ± .010
ANGLES X° ± 2°

HEAT TREAT
MATERIAL GOV. SPEC.
STEEL MIL - H - 6875
ALUM. MIL - H - 6088
MAG. CAST MIL - H - 6857

CONTRACT NO.
SPEC. CONTROL NO.
Approved by : JDH
Checked by : JDH
Drawn by : CDB
Date : 30 APR 2012

Airglas, Inc.
Anchorage, Alaska

GLH3000 SKI INSTALLATION ON CESSNA 170,180

Size	Code Ident.No.		REV
B	17564	GLH3000-170	C

Scale: Do Not Scale | Sheet 3 OF 4

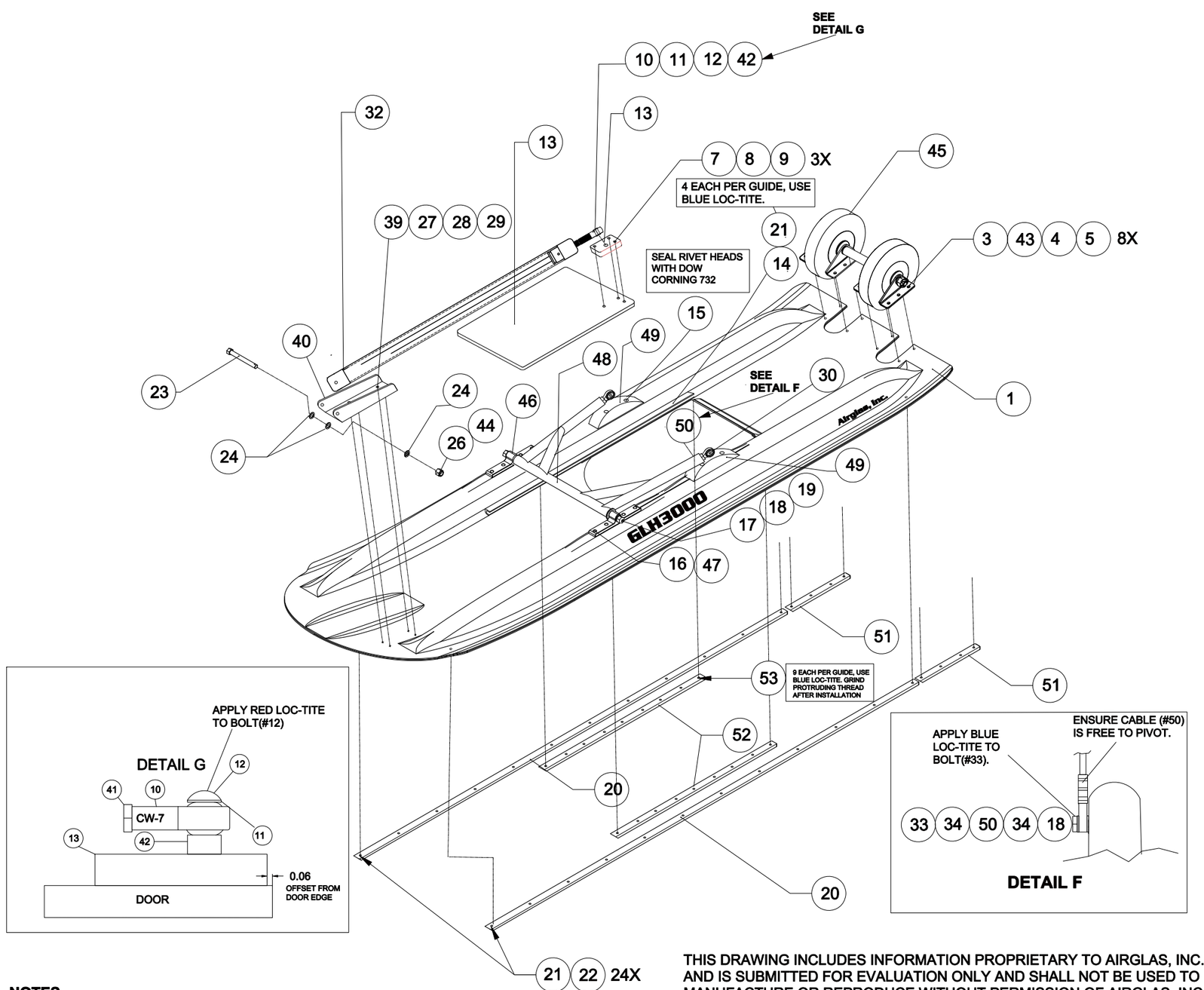

NO.	QTY	CODE	PART NO.	DESCRIPTION	NOTES
53	36		NAS517-3-3	SCREW	
52	4	17564	GLH3000-01-3-180	INBOARD RUNNER	
51	2	17564	GLH3000-01-11-170	AFT RUNNER	
50	2	17564	GLH3000-10-170	YOKE RESTRAINT CABLE- SEE NOTE 3	
49	4	17564	LH3600-01-170	YOKE PAD	
48	2	17564	GLH3000-5-170	YOKE	
47	16		AN960-516	WASHER	ALT.: NAS1149F0563P
46	4	17564	LW2500-3	SKI ATTACH FITTING	
45	2	17564	GLH3000-12	TAILWHEEL ASSY	
44	2		AN380-2-2	COTTER PIN	ALT.: MS24665-132
43	16		2931	SS WASHER	
42	2	17564	PA32-206L-5 MOD. 3/8 THICK	SPACER (PA32-206L-5 MOIFIED 3/8 THICK)	
41	2		AN316-7(RH)	NUT	
40	2	17564	LH3600-9A-6	MOUNT, HYDRAULIC CYLINDER	
39	8		A3235-020-24A	COUNTERSUNK WASHER	
38	2		AN365-524	NUT	ALT.: MS21045-5
37	2		AN960-516	WASHER	ALT.: NAS1149F0563P
36	2		30185	WASHER	
35	2		NAS514P524-16	SCREW	
34	6		AN960-716	WASHER	ALT.: NAS1149F0763P
33	2		AN6-10A	BOLTS	
32	2	17564	GLH3000-9A	HYDRAULIC	
31	4		AN316-12R	NUT	
30	4		CM12	ROD END	
29	8		MS21042-3	NUT	
28	8		AN960-10	WASHER	ALT.: NAS1149F0363P
27	8		AN509-10R12	SCREW	ALT.: MS24694S54
26	2		AN310-4	NUT	
25	2		AN960-416	WASHER	ALT.: NAS1149F0463P
24	6		AN960-416L	WASHER	ALT.: NAS1149F0432P
23	2		AN4-25	BOLT	
22	48		MS21042-3	NUT	
21	56		AN509-10R12	SCREW	ALT.: MS24694S54
20	4	17564	GLH3000-01-3-170	RUNNER	
19	4		AN365-624C	NUT	ALT.: MS21045-6
18	10		AN960-616	WASHER	ALT.: NAS1149F0663P
17	2	17564	GLH3000-5-6	RETAINING ROD, YOKE	
16	16		AN5-11A	BOLT	
15	8		SSB-6-12	RIVET	
14	4	17564	GLH3000SG-01-2	GUIDE	
13	2	17564	GLH3000-8-1	DOOR	
12	2		AN27-23	CLEVIS BOLT	
11	2		AN960-716	WASHER	ALT.: NAS1149F0763P
10	2		CW-7	ROD END	
9	6		AN364-428	NUT	ALT.: MS21083N4
8	6		AN960-416L	WASHER	ALT.: NAS1149F0432P
7	6		NAS517-4-14	SCREW	
6	2	17564	GLH3000-9-8	DOOR, CYLINDER ATTACH BLOCK	
5	16		AN365-428L	NUT	ALT.: MS21044N4
4	16		AN960-416L	WASHER	ALT.: NAS1149F0432P
3	16		AN4-7A	BOLT	
2	1	17564	GLH3000-SG-2	RIGHT SKI	(NOT SHOWN)
1	1	17564	GLH3000-SG-1	LEFT SKI	

QUANTITY FOR SKI KIT (2 SKIS)

LIST OF MATERIALS

NOTES

1. INSTALL PER AIRGLAS INSTALLATION INSTRUCTIONS (MANUAL GLH3000-105)
2. LEFT SKIS SHOWN, RIGHT SKIS OPPOSITE.
3. USE GLH3000-10-170-1 REV A CABLE (8.0 ") FOR SKIS WITH BOLT HOLE CENTER 2 1/4" ABOVE SKI BOTTOM. USE GLH3000-10 -170-1 REV. B CABLE (8.5") FOR SKIS WITH BOLT HOLE CENTER 1 3/4" ABOVE SKI BOTTOM.
4. SKI THICKNESS MAY VARY ADJUST FASTENER LENGTHS THRU SKI AS REQUIRED.

THIS DRAWING INCLUDES INFORMATION PROPRIETARY TO AIRGLAS, INC. AND IS SUBMITTED FOR EVALUATION ONLY AND SHALL NOT BE USED TO MANUFACTURE OR REPRODUCE WITHOUT PERMISSION OF AIRGLAS, INC.

This document and the information disclosed herein are proprietary information of Airglas, Inc. Neither this document nor the information contained herein shall be transmitted, reproduced, copied, or disclosed in any form or by any means without the written authorization of Airglas, Inc.

The information disclosed herein includes trade secrets and confidential business and/or financial information and falls within exemption (b) (4) of 5 USC 552 (FOIA) and the prohibitions of 18 USC 1905.

NEXT ASSY.	USED ON
APPLICATION	

UNLESS OTHERWISE SPECIFIED DIMENSIONS ARE IN INCHES
DECIMALS .X ± .1 .XX ± .03 .XXX ± .010
ANGLES X° ± 2°

HEAT TREAT

MATERIAL	GOV. SPEC.
STEEL	MIL - H - 6875
ALUM.	MIL - H - 6088
MAG. CAST	MIL - H - 6857

CONTRACT NO.
SPEC. CONTROL NO.
Approved by : JDH
Checked by : JDH
Drawn by : CDB
Date : 30 APR 2012

Airglas, Inc.
Anchorage, Alaska

GLH3000 SKI INSTALLATION ON CESSNA 170, 180

Size	Code Ident.No.		REV
B	17564	GLH3000-170	C

Scale DO NOT SCALE Sheet 4 OF 4