| REVISIONS | | | | |
|---|---|---|---|---|
| ZONE | REV | DESCRIPTION | DATE | APRVD BY |
| ALL | A | Edited drawing and BOM to reflect current design and hardware callouts | 14 FEB 06 | CED |
| | B | Added Cage Codes to BOM | 20 JAN 09 | CED |
| | C | Minor part number changes. Detail D added. Added LW2500-105-1 Installation manual note. Added 3" extended gear rigging part numbers. Tailwheel part number added. 1.5" axle part numbers added. | 26 JUN 12 | CDB |

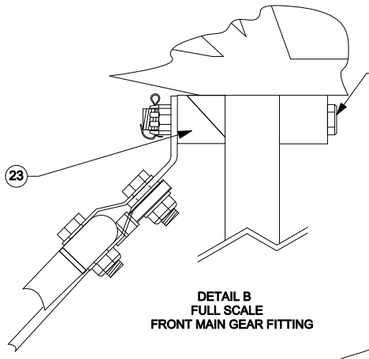


NOTE : WHEN INSTALLING FRONT BUNGEE & SAFETY CABLE ASSY. USE 1/2" LONGER LENGTH BOLT (AN6-32 MIN. LENGTH) TO ACCOMODATE SPACER (# 23)

DETAIL B
FULL SCALE
FRONT MAIN GEAR FITTING

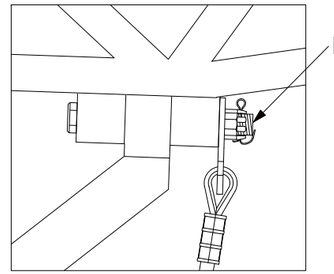

EXISTING BOLT

DETAIL C
FULL SCALE

## NOTES

1. INSTALL PER AIRGLAS INSTALLATION INSTRUCTIONS:
   MANUAL LW2500-105 for PA-18 and Aviat A-1 series.
   MANUAL LW2500-105-1 for PA-12 and PA-14
2. LEFT SKI IS SHOWN , RIGHT SKI IS OPPOSITE
3. QTY'S SHOWN ARE FOR BOTH SKIS
4. ITEMS 5, 6 & 7 ARE MANUFACTURED AND WELDED AT AIRGLAS FACTORY ONLY

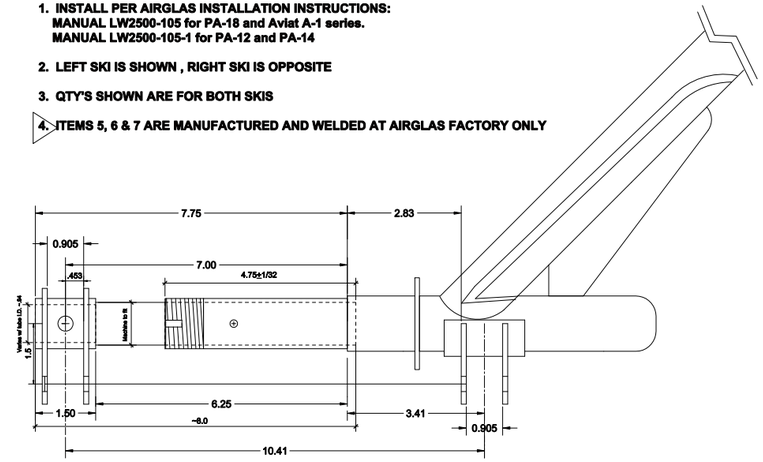


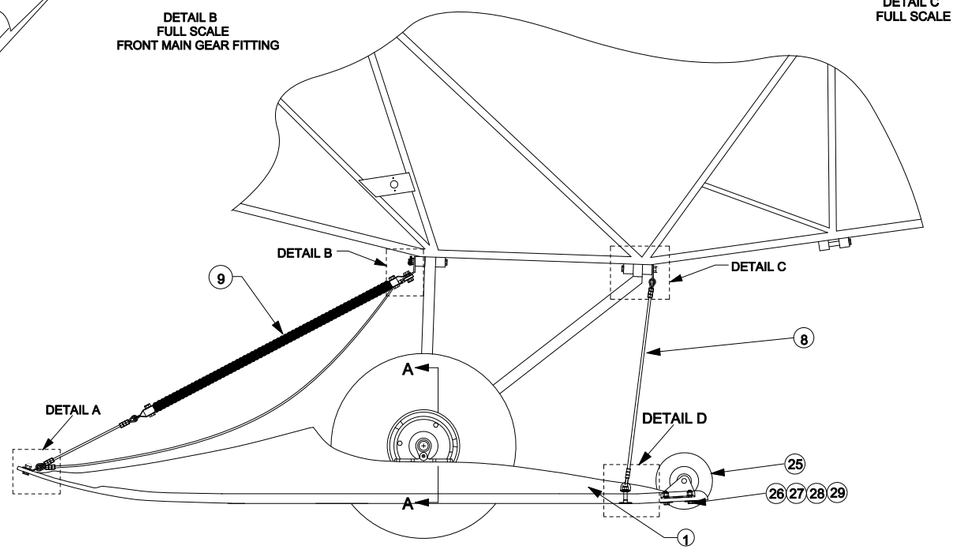


AIRCRAFT IS IN FLIGHT ATTITUDE

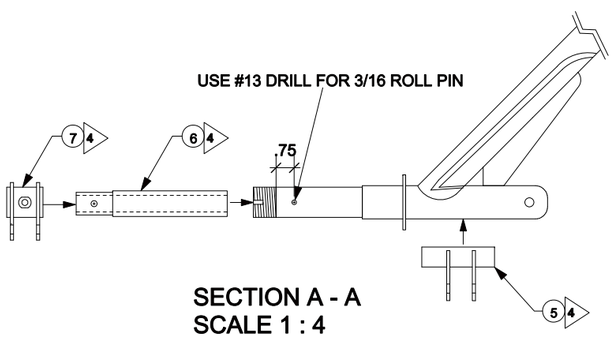


SECTION A - A
SCALE 1 : 4

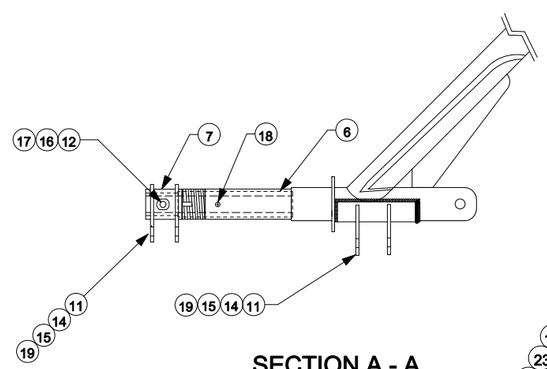


SECTION A - A
SCALE 1 : 4

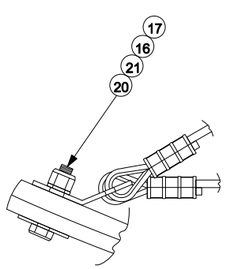


DETAIL A
FULL SCALE

DRAWING IS REDUCED 1/2 SIZE

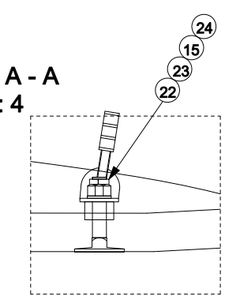


DETAIL D

| NO. | QTY | CODE IDENT. NO. | PART NUMBER | DESCRIPTION | STOCK SIZE | MATERIAL | MATERIAL SPEC. | UTS 1000 | FINISH | CALC. UNIT | ACT. WT | ZONE |
|---|---|---|---|---|---|---|---|---|---|---|---|---|
| 29 | 8 | | AN960-416 | WASHER | | | | | | | | |
| 28 | 8 | | AN365-428A | NUT | | | | | | | | |
| 27 | 8 | | 2931 | SS FENDER WASHER | | | | | | | | |
| 26 | 8 | | AN4-7A | BOLT | | | | | | | | |
| 25 | 2 | 17564 | GLH3000-18 | TAIL WHEEL ASSY. | | | | | | | | |
| 24 | 4 | | AN363-616C | NUT | | | | | | | | |
| 23 | 4 | 17564 | PA32-206L-5 | SPACER | | | | | | | | |
| 22 | 2 | | EB616-21 | ELEVATOR BOLT | | | | | | | | |
| 21 | 4 | | 2931 | SS FENDER WASHER | | | | | | | | |
| 20 | 12 | | AN4-7A | BOLT | | | | | | | | |
| 19 | 6 | | AN380-3-2 | COTTER PIN | | | | | | | | |
| 18 | 2 | | MS171598 for 1.25" MS171598 for 1.50" | ROLL PIN | | | | | | | | |
| 17 | 18 | | AN365-428 | NUT | | | | | | | | |
| 16 | 18 | | AN960-416 | WASHER | | | | | | | | |
| 15 | 8 | | AN960-616 | WASHER | | | | | | | | |
| 14 | 6 | | AN310-6 | NUT | | | | | | | | |
| 12 | 2 | | AN4-14A | BOLT | | | | | | | | |
| 11 | 4 | | AN6-16 | BOLT | | | | | | | | |
| 10 | 2 | | AN6-21 | BOLT | | | | | | | | |
| 9 | 2 | 17564 | LW2500PA18-2 | RIGGING, BUNGEE & SAFETY CABLE ASSY. STANDARD GEAR | | | | | | | | |
| 9 | 2 | 17564 | LW2500PA18-9E3 | RIGGING, BUNGEE & SAFETY CABLE ASSY. 3" EXTENDED GEAR | | | | | | | | |
| 8 | 2 | 17564 | LW2500-PA18-8 | RIGGING, CHECK CABLE ASSY. STANDARD GEAR | | | | | | | | |
| 8 | 2 | 17564 | LW2500-PA18-8E3 | RIGGING, CHECK CABLE ASSY. 3" EXTENDED GEAR | | | | | | | | |
| 7 | 2 | 17564 | LW2500-PA-18-7 | OUTBD ATTCH BRACKET. | | | | | | | | |
| 6 | 2 | 17564 | LW2500-PA-18-6A | STUB AXLE, 1.50" | | | | | | | | |
| 6 | 2 | 17564 | LW2500-PA-18-6 | STUB AXLE,1.25" | | | | | | | | |
| 5 | 1 | 17564 | LW2500-PA18-4B | INBD ATTACH BKT., 1.50" AXLE | | | | | | | | |
| 5 | 1 | 17564 | LW2500-PA18-4A | INBD ATTACH BKT., 1.25" AXLE | | | | | | | | |
| 3 | 4 | 17564 | LW2500-3 | SKI ATTACH FITTING | | | | | | | | |
| 2 | 1 | 17564 | LW2500-2 | RIGHT SKI | | | | | | | | |
| 1 | 1 | 17564 | LW2500-1 | LEFT SKI | | | | | | | | |
| | 1 | 17564 | LW2500-PA18 | SKI KIT | C.G. IS 1.5" FORWARD OF C.L. OF MAIN GEAR AXLE, INSTALLED KIT WT IS 90 lbs. | | | | | | | |

LIST OF MATERIALS

| | |
|---|---|
| NEXT ASSY. | USED ON |
| | PA-18 |
| APPLICATION | |

UNLESS OTHERWISE SPECIFIED DIMENSIONS ARE IN INCHES
DECIMALS .X ± .1 .XX ± .03 .XXX ± .010
ANGLES X° ± 2°
HEAT TREAT
MATERIAL GOV. SPEC.
STEEL MIL - H - 6875
ALUM. MIL - H - 6088
MAG. CAST MIL - H - 6857

CONTRACT NO.
SPEC. CONTROL NO.
Approved by : WKL
Checked by :
Drawn by : Gary Landes
Date : 3-31-97

**AIRGLAS, INC.**
Anchorage, Alaska

LW2500 SKI INSTALLATION
PIPER PA-18

| Size | Code Ident.No. | | REV |
|---|---|---|---|
| B | 17564 | LW2500PA18 | C |

Scale: Do Not Scale
Sheet 1 OF 1